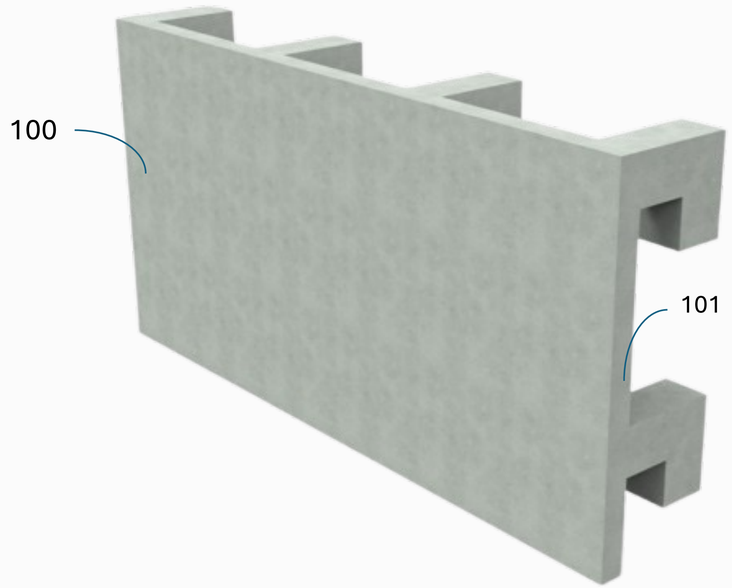

1 Front Isometric View

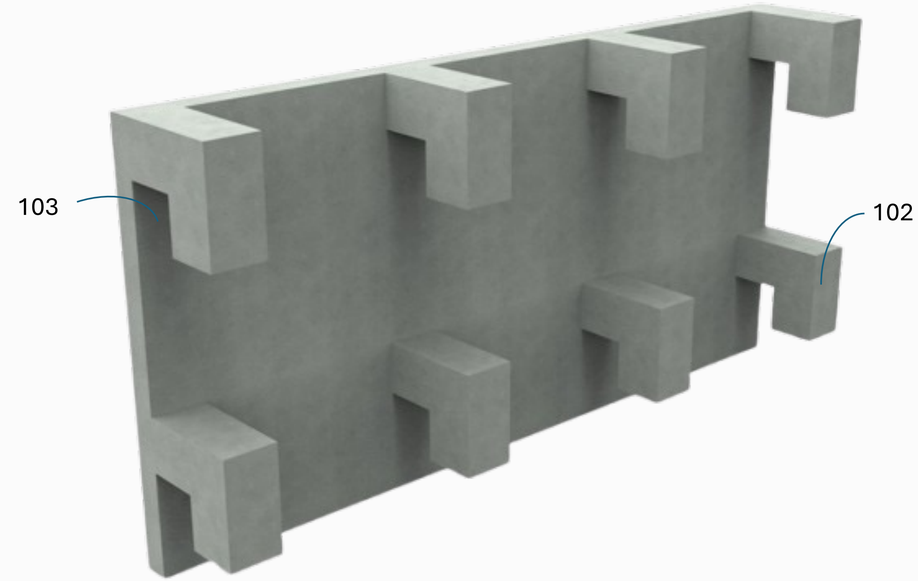

2 Rear Isometric View

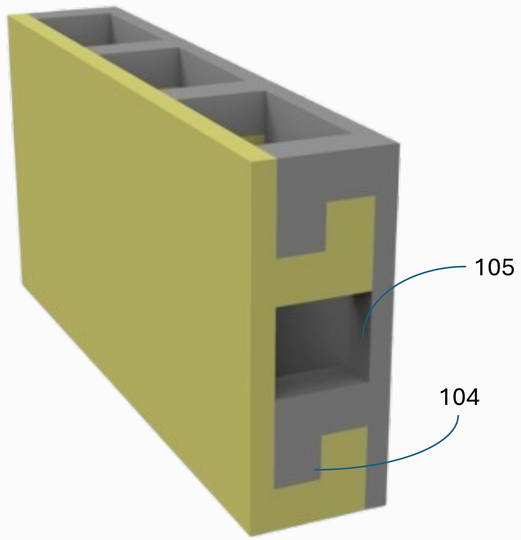

3 Dual Panel Structural Assembly

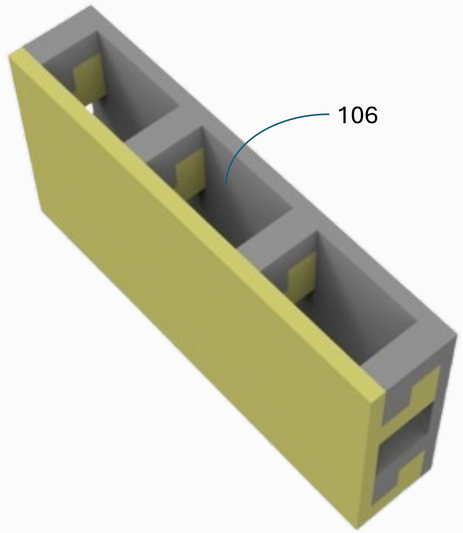

4 Isometric Cutaway View

100 – Finished Architectural Face.

101 – Concrete or Vitrium Slab.

102 – Male Interlocking Projections

103 – Female Interlocking Channels

104 – Male & Female Interlock Engagement

105 – Horizontal Conduit Channel

106 - Vertical Conduit Channel

ArtStone by A.I.A.L	INTERLOCKING READY TO-FIX WALL PANEL	
Designer: **Nurudin Samsuddin** Mithani	MAT: Concrete / Vitrium	Scale: 1:10
Approved by: N/A	Sonle: N/A	Pager: 1·01
Date: 16 F Ffebruary 2026	Sectior: N/A	
Email: Nurudin@aalgroup.com LGmet	DRAWING NO: ARTSTONE/UAE/26/02/01	